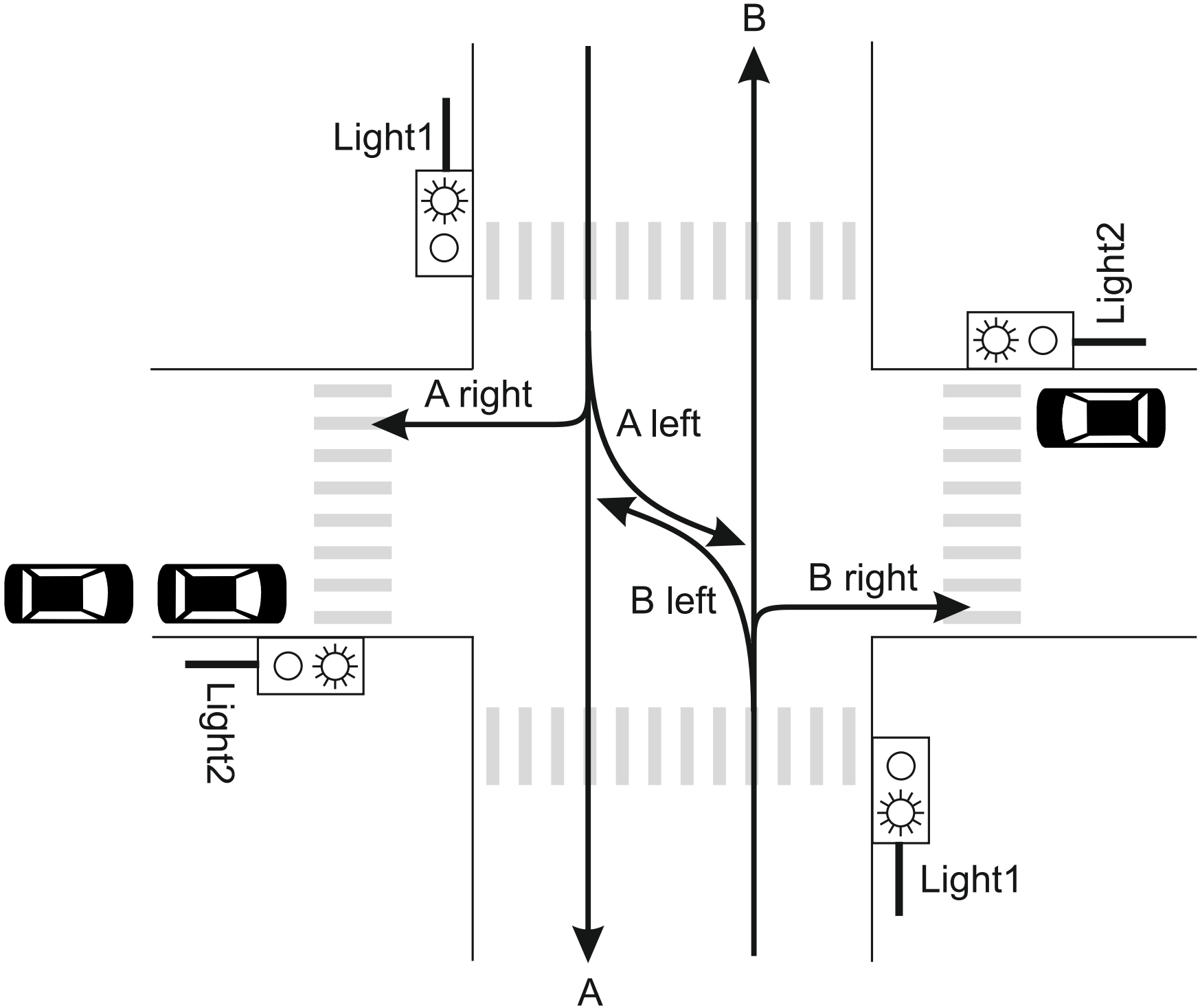
B
Light1
Light2
A right
A left
B left
B right
Light2
Light1
A